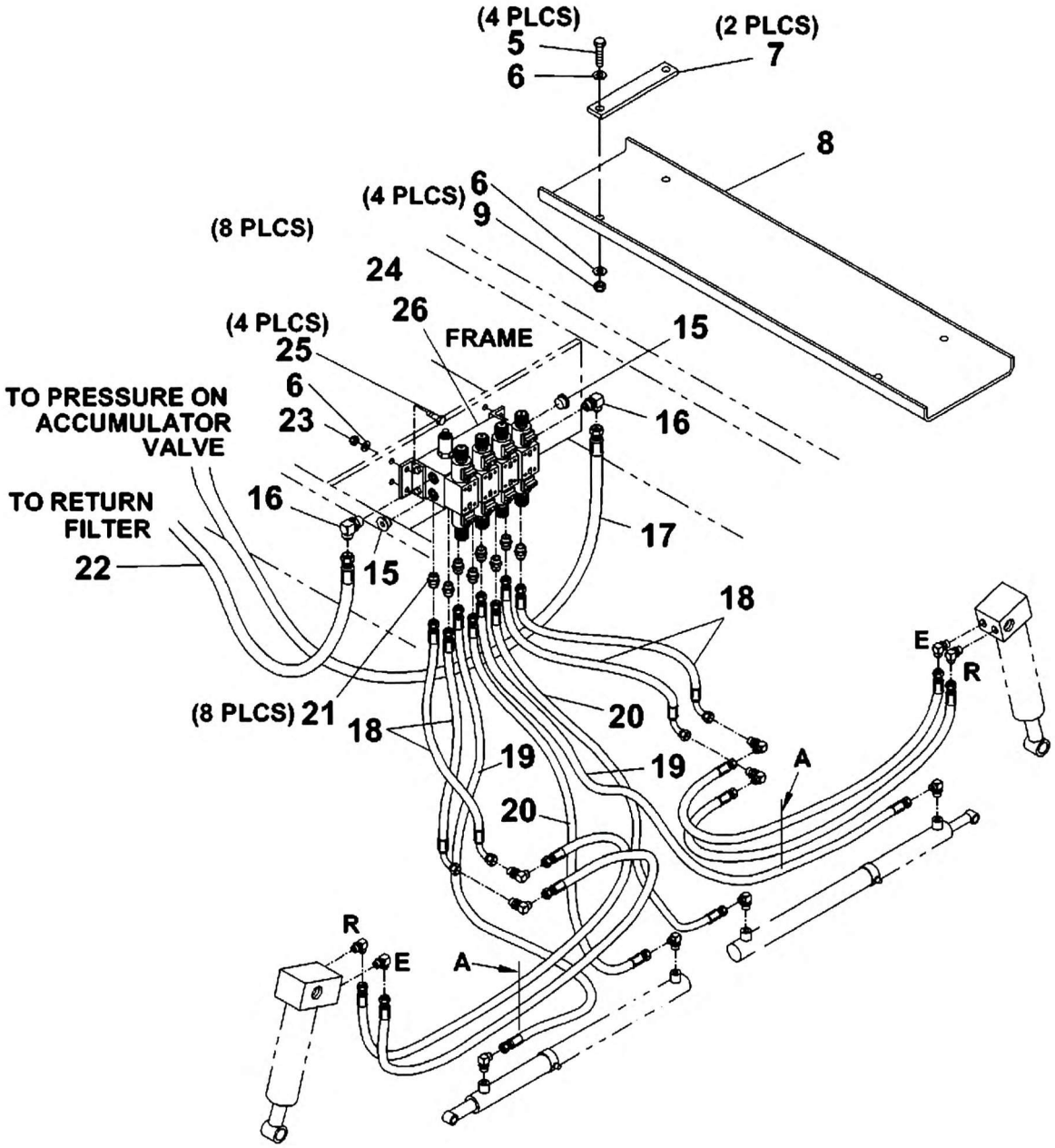

80014743

(SHEET 2 OF 2)

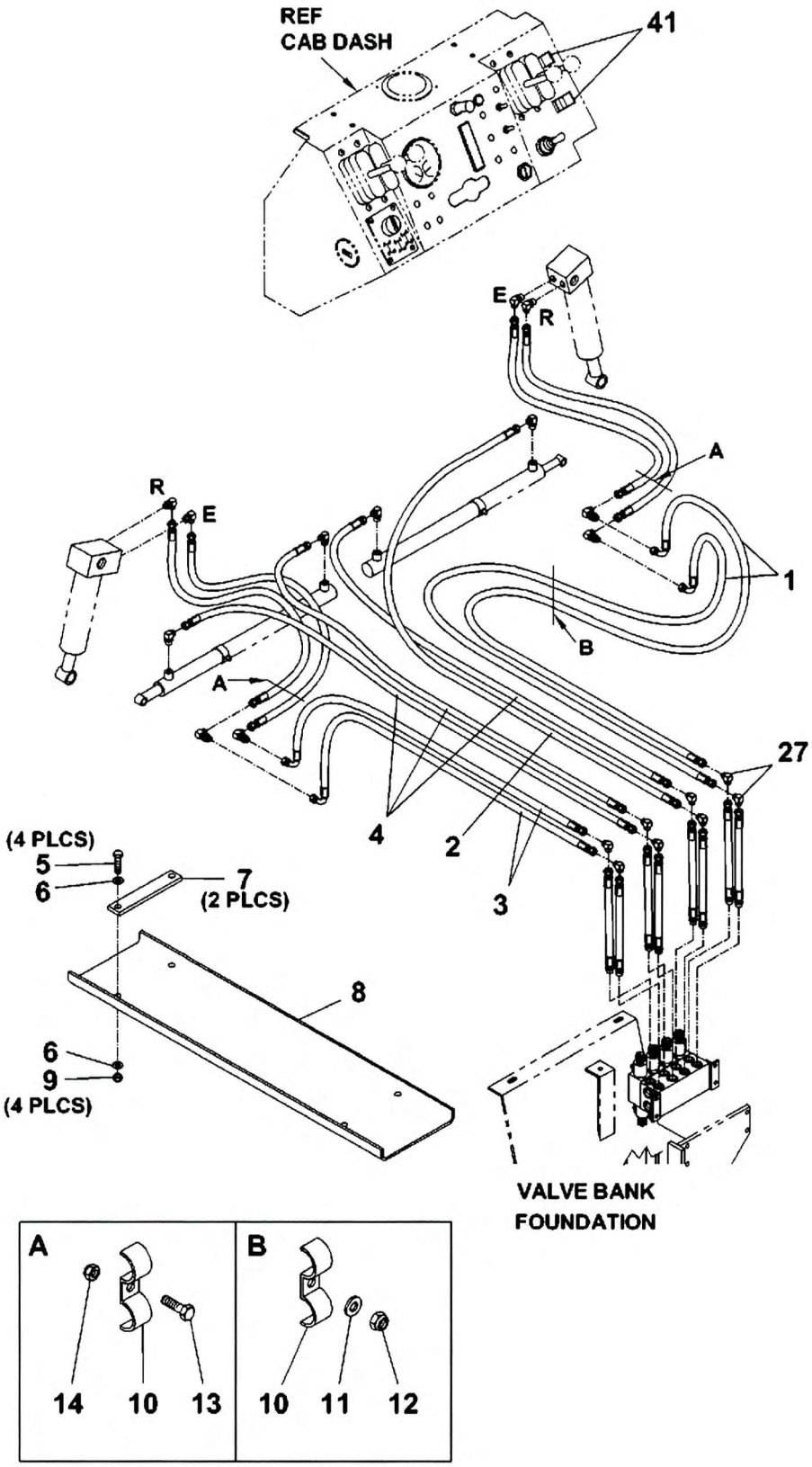

80014743

(SHEET 1 OF 2)